TELCRO I SWITCH CONTROLLER

Robert Glaser
IC Engineering
Final Revision (April 1982)

The Switch Controller is a sophisticated, microprocessor based unit designed to be an integral part of an intelligent least cost routing telephone switching center. The controller provides an interface between three components: the telephone line couplers; a matrix crosspoint switch; and a micro- or minicomputer. This overall system is shown in figure 1. The detect lines between the controller and the couplers permit the controller to detect incoming calls (ringing) and to monitor the status of calls in progress (line current, used to determine hangups). The seize lines permit the controller to activate the telephone lines (on-hook or off-hook status). The controller sends the proper sequence of signals to make or break connections in the matrix switch through control lines. The external computer is used to route incoming calls to the optimum outgoing line (least cost routing), and to log all calls. This LCR computer communicates with the controller through a single, standard, bidirectional RS-232 compatible interface.

The switch controller provides functions to operate the system, leaving only routing and logging requirements for the LCR computer. In addition to the input and output lines needed for the controller to interface with the couplers and matrix switch, several hardware functions are incorporated in the controller to facilitate overall system operation. A touchtone (TM) decoder is used to receive information from the customer, from the incoming lines. This is usually the customer identification number and the telephone number to be called. A touchtone generator is used to make outgoing calls, and as a source of similar information to higher level switching centers. A dial tone detector is used to determine when outgoing lines are ready to receive dialing tones, and for detection of ready tones provided by higher level switching centers. A dial tone generator is used to notify incoming callers that the switching center is ready to receive tones. A busy tone generator is provided so that customers may be informed that the outgoing line is not available for their call. A real-time clock counts up to 99,999,999.99 seconds, providing time for call-logging purposes for the LCR computer. The controller utilizes these internal hardware functions in conjunction with the external hardware to perform its task.

The controller is designed to operate with a 16 X 16 matrix switch, and 24 telephone lines. The switch is organized into two groups: SIDE1, and SIDE2. Each side has ports A to P. The crosspoint switch is capable of connecting any ports on SIDE1 to any ports on SIDE2. Ports A through L connect to telephone lines on each side. Port M (on both sides) connects to the touchtone decoder, generator, dial tone generator, and dial tone detector. Port N connects to the busy tone generator. Ports O and P are unallocated; they can be used for speech synthesis input,

or as a means of connecting two ports on the same side together.

Typical Operation

An incoming call is detected by the controller -- it connects the dial tone generator and touchtone decoder to that incoming line, and takes the line off-hook (answers the phone). The customer hears the dial tone, and sends his identification number, followed by the area code and telephone number he wishes to call. After receipt of the first touchtone, the dial tone generator is turned off. When all the desired information is received, the controller acknowledges this to the caller with a prespecified number of beeps, then disconnects the touchtone decoder from the incoming line and notifies the LCR computer that a call is waiting for placement. The LCR computer then interrogates the controller to determine on which port and side the call came in, and the identification number, telephone number requested, and time. The LCR computer decides on which outgoing line to place the call, and through what system. It notifies the controller, and the controller automatically connects the dial tone detector and touchtone generator to the outgoing line, and takes the line off-hook. After receiving dial tone, the controller dials the telephone number for a direct call: for a relayed call the secondary switch number, identification number, and requested telephone number. The controller then disconnects the dial tone detector and touchtone generator from the outgoing line, and connects the incoming and outgoing lines together.

When the conversation is completed, one of the parties hangs up -- this is detected by the controller, which notifies the LCR computer. If AUTO ON-HOOK is set to YES, then the controller will place all lines connected to the disconnected line on-hook (If AUTO ON-HOOK is set to NO, it will not hang the other lines up -- this is necessary to handle conference calls). The LCR computer then interrogates the controller to determine which call is terminated, reads the time, and logs the call.

While one call is being processed (the customer is sending digits), any additional calls appearing will not be answered. When the current call is completed, incoming calls will be serviced in their order of arrival. Disconnects occuring during call processing are detected and will be flagged after the current call is processed. In this manner, customers simply wait until the ringing is answered. If the system gets bogged down, customers may have to wait longer than they desire, and can simply hang up and try again a little later.

Supplementary Functions

When an input signal informs the controller that main power has been lost, and backup power is being utilized, the controller notifies the LCR computer. It is expected that the LCR computer would then place a service call to a central location, informing of the power fail situation. Similarly, when power is transferred from backup power to main power, the controller so notifies the LCR computer. In this fashion, power outages can be tracked by the LCR computer, and short outages may be ignored if desired.

If a telephone line failure is detected, the controller notifies the LCR computer, which may either try that line again, or flag that line as defective. If a line is taken off-hook, and no dial tone is detected within a prespecified period of time, that line is classified as failed.

Communication Protocols

The controller communicates with the LCR computer with serial asynchronous characters. This consists of the standard start bit, eight data bits, and one stop bit. The speed is switch selectable, and may be set to 75, 110, 150, 300, 600, 1200, 2400, or 4800 baud. For ease of troubleshooting, and use with BASIC, communication is through printing ASCII characters, available from an upper case only keyboard. Lower case letters may not be used in place of upper case letters. Two forms of communication take place: notification, and interactive.

Four symbols can be transmitted from the controller to the LCR computer when an appropriate condition occurs, without being requested by the LCR computer. This provides notification of some condition which may require action. These conditions, and the corresponding characters, are:

Incoming call -- $
Hangup -- @
Power failure -- F
Power restored -- P

Notification of incoming calls are only made after a number of touchtone digits has been received. This number is specified by HOLD, which is initialized to 16 and can be changed by the LCR computer. A customer may cancel all previous digits by sending "#", providing a new dial tone. Receipt of a "*" forces notification without the required number of digits; this is intended to be used for special features, such as speed dialing. When waiting for digits, a specified number of seconds is permitted to elapse between digits; if this time, specified in DIGIT TIME, is exceeded, the call is aborted, and the line is placed on-hook; a "$" is not sent, and an "@" instead notifies of the aborted call. The LCR computer can distinguish between a normal disconnect and a call abort, because an aborted call will always be from a line which is not currently in use. The controller may be commanded to stop answering incoming calls. This is for use when service is required, and provides for a gentle system shutdown without bumping customers off the switch.

For incoming calls and hangups, if the "$" or "@" cause no response from the LCR computer, they are repeated at thirty second intervals, indefinitely. Other than for notification of these four conditions, no communications are ever initiated by the controller.

The LCR computer initiates interactive communications. A sequence of characters, of variable length, sent by that computer, commands the controller. These commands may produce a response from the controller; however, no more than a single character is ever sent by the controller to the LCR computer for

each request. This can appear to be cumbersome, but provides handshaking between the two units, and eliminates any possible problems which could occur if the LCR computer could not respond in time to multiple characters. This characteristic prevents becoming locked-in with any specific LCR computer. The controller will respond with a "?" if an undefined command is sent by the LCR computer.

Responses from the controller to the LCR computer may be qualified. When qualified, they are only sent if QUALIFIER is set to "YES." Unqualified responses are always sent.

Thirteen touchtone registers are provided. A holding register stores incoming digits; these include the identification number and requested telephone number. This holding register can be read, and modified, by the LCR computer. Twelve dialing registers, labeled A through L (these bear no relationship with telephone lines A through L) are available for outgoing calls. These dialing registers are loaded from the LCR computer, and cannot be read. In addition to the 16 standard touchtones, four special codes may be embedded within the dialing registers. These are: wait for dial tone (W), pause one second (S), send the 10-digit telephone number in the holding register (H), and send the 7-digit number in the holding register (L). When a W is encountered in the transmission sequence, up to DIAL WAIT seconds are allotted for receipt of dial tone before continuation of transmission. When an H is encountered, the last ten digits (the requested telephone number) of the holding register are sent, after which the next digit returns to the dialing register. L performs the same functions for 7-digit numbers. When the LCR computer decides how to route a telephone call, it commands the controller to transfer the current incoming call to a specified outgoing line (on the opposite side of the matrix switch), with one of the dialing registers A-L. Through use of the H and L features, it is usually not necessary to modify a dialing register for specific calls.

An example for redialing into another switching center with ID #12345678, and telephone number 555-1234: dialing register = "W5551234W12345678H". Specifying this register in the transfer call instruction results in accessing the outgoing line, waiting for dial tone, calling the local switch number, waiting for ready tone, sending the ID number, and sending the customer's 10-digit requested number. Calls into an area where a direct, leased line is available need only store "WL" into the dialing register, since the area code is not needed. Similarly, to utilize a WATS line, a dialing register containing "WH" is used.

It is intended that upon power-up the LCR computer would preload one dialing register for all of the leased lines, and a separate dialing register for each higher level switching center that can be used. In this fashion, the LCR computer need only decide which line and dialing register to use for each call.

Controller Hardware

The controller is an 8085 based microprocessor. This system contains 4000 bytes of ROM, 1000 bytes of RAM, and 100 input/output lines. The touchtone generator and decoder are

specialized integrated circuits. The dial tone generator produces a pair of digitally synthesized sine waves, creating a "precise" dial tone of 350 Hz and 440 Hz. A steep high-pass filter drives the touchtone decoder, attenuating the local dial tone. The busy tone generator is digitally controlled. All timing is done with quartz crystals, for high accuracy and low drift (including the real-time clock).

The option switch sets baud rate as follows:

Baud	Switch 4-3-2
75	ON-ON-ON
110	ON-ON-OFF
150	ON-OFF-ON
300	ON-OFF-OFF
600	OFF-ON-ON
1200	OFF-ON-OFF
2400	OFF-OFF-ON
4800	OFF-OFF-OFF

Switch 1 initializes QUALIFIER either ON or OFF upon power-up. Switch 5 permits jumps via the MJ command.

The controller requires regulated +13.6 volts at 2 amperes. Figure 2 shows a block diagram of the hardware, figures 3 through 7 are the schematic diagrams, and figure 8 shows the parts layout. Listing 1 is the 8085 assembly language control program.

Command: Initialize All
Code: I*
Response: I [if qualified after execution]
Function: set HOLD to 16, clear the crosspoint switch, set QUALIFIER according to the DIPSWITCH, set AUTO ON-HOOK to YES, set DIGIT TIME to 10 seconds, set DIAL WAIT to 20 seconds, hang up all lines, stop answering calls, clear disconnect status, set BEEPS to 2, clear the BO and DA lists, and initialize the store and read time pointers and the read holding register pointer.

Command: Initialize Crosspoint
Code: IC
Response: C [qualified]
Function: clear the crosspoint switch

Command: Initialize Lines
Code: IL
Response: L [qualified]
Function: hang up all lines

Command: Initialize Call Answering to YES
Code: I$Y
Response: R [qualified]
Function: answer incoming calls

Command: Initialize Call Answering to NO
Code: I$N
Response: R [qualified]
Function: stop answering incoming calls

Command: Initialize QUALIFIER to YES
Code: IQY
Response: R
Function: qualified responses will be sent

Command: Initialize QUALIFIER to NO
Code: IQN
Response: R
Function: qualified responses will not be sent

Command: Initialize HOLD
Code: IHxy [xy = 00-99]
Response: R [qualified]
Function: set HOLD to xy

Command: Initialize Wait
Code: IWxy [xy = 01-99]
Response: R [qualified]
? if xy invalid
Function: Set DIGIT TIME to xy seconds.

Command: Initialize Time
Code: ITx [x = 0-9]
Response: R [qualified] , unless
T when least significant (10th) digit received
Function: set TIME (10 digits, i.e. 12,345,678.90 seconds) A single digit is set per command, most significant to least. To be certain that the controller and the LCR computer are in sync, digits should be sent until "T" is received; this guarantees that the next digit expected is the most significant.

Command: Initialize AUTO ON-HOOK to YES
Code: IOY
Response: R [qualified]
Function: A detected disconnect will hang up all lines connected to that disconnected line.

Command: Initialize AUTO ON-HOOK to NO
Code: ION
Response: R [qualified]
Function: A detected disconnect will not hang up all lines connected to that disconnected line.

Command: Clear Pending Call Status
Code: IX
Response: R [qualified]
Function: Stop sending "$" for the last incoming call.

Command: Initialize BEEPS
Code: IBx [x = 0-9]
Response: R [qualified]
? if x invalid
Function: Specify the number of acknowledgement beeps.

Command: Initialize DIAL WAIT time
Code: IDxy [xy = 01-99]
Response: R [qualified]
? if xy invalid
Function: Specify the time to wait for a dial tone as xy seconds for a "W" in a dialing register.

Command: Initialize Ring status
Code: IR
Response: R [qualified]
Function: Clear status of incoming calls not yet answered.

Command: Memory Read High
Code: MRHxxxx [xxxx = hexadecimal address]
Response: 0-F
? if xxxx invalid
Function: Reads the high nibble of the location specified by address xxxx. Used for testing.

Command: Memory Read Low
Code: MRL
Response: 0-F
Function: Reads the low nibble of the location specified by the last MRH command. Used for testing.

Command: Memory Store
Code: MSxy [xy = 2 hexadecimal digits]
Response: R [qualified]
? if x, y invalid
Function: Store xy at the location last specified by the last MRH command. Used for testing.

Command: Memory Jump
Code: MJ
Response: NONE if jump executed
? if jump not permitted
Function: Jump and begin execution at the location specified by the last MRH command. If switch 5 is ON, execution is permitted. If switch 5 is OFF, the jump is not permitted. Used for testing.

Command: Transfer Call from SIDE2 to SIDE1
Code: X1yz [y = A-L, z = A-P]
Response: R when transfer complete
D if dialing failure
? if incoming call is not from SIDE2
? if yz invalid
Function: Transmit dialing register y to SIDE1 line z, then connect the incoming SIDE2 line to SIDE1 line z. Disconnect signals from SIDE1 line z are ignored for 5 seconds. If a dial tone is not received within DIAL WAIT seconds for a "W" specified in the dialing register, a "D" is sent instead of the "R."

Command: Transfer Call from SIDE1 to SIDE2
Code: X2yz [y = A-L, z = A-P]
Response: R when transfer complete
D if dialing failure
? if incoming call is not from SIDE1
? if yz invalid
Function: Transmit dialing register y to SIDE2 line z, then connect the incoming SIDE1 line to SIDE2 line z. Disconnect signals from SIDE2 line z are ignored for 5 seconds. If a dial tone is not received within DIAL WAIT seconds for a "W" specified in the dialing register, a "D" is sent instead of the "R."

Command: Transmit Sequence
Code: XSy [y = A-L]
Response: R when sequence sent
D if dialing failure
? if y invalid
Function: Transmit dialing register y. No connections are made by this command, so the CROSSPOINT command must be utilized in conjunction with XS. If a dial tone is not received within DIAL WAIT seconds for a "W" specified in the dialing register, a "D"

is sent instead of the "R." Needed only for special purpose functions.

Command: Store Dialing Register
Code: Syz...zX [y = A-L, z = 0-9, *, #, A-D, H, L, W, S]
Response: R [qualified]
Function: Store sequence z...z into dialing register y. Maximum sequence length is 24. Digits 0-9, *, and # are the standard 12 touchtones. Digits A-D are the fourth column touchtones. H (Higher switch) transmits the last 10 digits of the holding register, and L (Local) transmits the last 7 digits of the holding register. W programs a Wait for dial tone (or ready tone). S programs a one second pause.

Command: Store Holding Register
Code: S#z...zX [z = 0-9, *, #, A-D, H, L, W, S]
Response: R [qualified]
Function: Replace the holding register with the specified sequence. NEVER store H or L in the last 10 or 7 digits of the holding register, respectively. Sequence digits explained above. Used only for special operations.

Command: Determine Last Disconnected SIDE1 Line
Code: D1
Response: A-L, X
Function: Find out which SIDE1 line was last placed on-hook. Used after receiving "@" notification. Can only be read once. If no lines have been disconnected since the last D1 command, "X" is sent.

Command: Determine Last Disconnected SIDE2 Line
Code: D2
Response: A-L, X
Function: Find out which SIDE2 line was last placed on-hook. Used after receiving "@" notification. Can only be read once. If no lines have been disconnected since the last D2 command, "X" is sent.

Command: Determine Incoming Line
Code: Lx [x = 1, 2]
Response: A-L, X
Function: Find out which SIDEx line has an incoming call waiting. Used after receiving "$" notification. The X1, X2, and IX commands clear the incoming line status. If there are no current incoming calls, "X" is sent.

Command: Make Line Connection
Code: LMxy [x = 1-2, y = A-L]
Response: R [qualified]
Function: Place SIDEx line y off-hook.

Command: Break Line Connection
Code: LBxy [x = 1-2, y = A-L]
Response: R [qualified]
Function: Place SIDEx line y on-hook.

Command: Read Holding Register Digit
Code: R
Response: 0-9, *, A-D, X
Function: Read a digit from the holding register. Consecutive reads will send consecutive digits. When the entire register has been read, "X" is sent. The holding register may then be read again. This register is cleared upon receipt of a new call or by receipt of the FDY or FDN commands.

Command: Read Real-Time Clock
Code: T
Response: 0-9, X
Function: Read a digit from the real-time clock. Consecutive reads will send consecutive digits, from the most significant digit to the least significant digit. When all ten digits have been read, "X" is sent.

Command: Determine Power Status
Code: P
Response: P, F
Function: Find out if power is normal (P), or failed (F).

Command: Make Crosspoint Connection
Code: CMxy [x, y = A-P]
Response: R [qualified]
Function: Make a crosspoint connection from SIDE1 port x to SIDE2 port y.

Command: Break Crosspoint Connection
Code: CBx [x = A-P]
Response: R [qualified]
Function: Break all SIDE1 connections to SIDE2 port x.

Command: Supply Dial Tone, and Force Incoming Line to Store into Holding Register
Code: FDY
Response: R [qualified] if incoming line not already transferred
? if no incoming line is waiting for transfer
Function: Behaves as if the current incoming line has just been answered: supplies dial tone, and waits for receipt of HOLD digits before sending "$".

Command: Do not supply Dial Tone, and Force Incoming Line to Store into Holding Register
Code: FDN
Response: R [qualified] if incoming line not already transferred
? if no incoming line is waiting for transfer
Function: As FDY, except a dial tone is not sent.

Command: Don't Answer Lines
Code: DAyzyz ... yzX [y = 1-2, z = A-L]
Response: R [qualified]
Function: Clear old don't answer list and create new one. For each yz pair in the command, ignore incoming ringing on SIDE y line z. Clear all by DAX.

Command: Busy Out Lines
Code: BOyzyz ... yzX [y = 1-2, z = A-L]
Response: R [qualified]
Function: Clear old busy out list and create new one. For each yz pair in the command, ignore disconnects on SIDE y line z. Clear all by BOX. This command does not by itself take a line off-hook; the LM command is used for that. (Intended to be used in conjunction with LM to busy out an incoming line so that TELCO will skip that incoming line in the normal hunt sequence.)

Command: Send Beeps
Code: BPx [x = 1-9]
Response: R [qualified]
Function: Send x beeps. The desired line must first be connected to row or column M.

Command: Lockout Controller
Code: LOCK
Response: R
Function: Place the controller into a standby condition -- it will ignore all inputs except the UNLOCK command, and will initiate no outputs. Intended to be used to control other RS-232 devices paralleled with controller.

Command: Restore to Normal Operation
Code: UNLOCK
Response: R
Function: Exit from LOCK command.

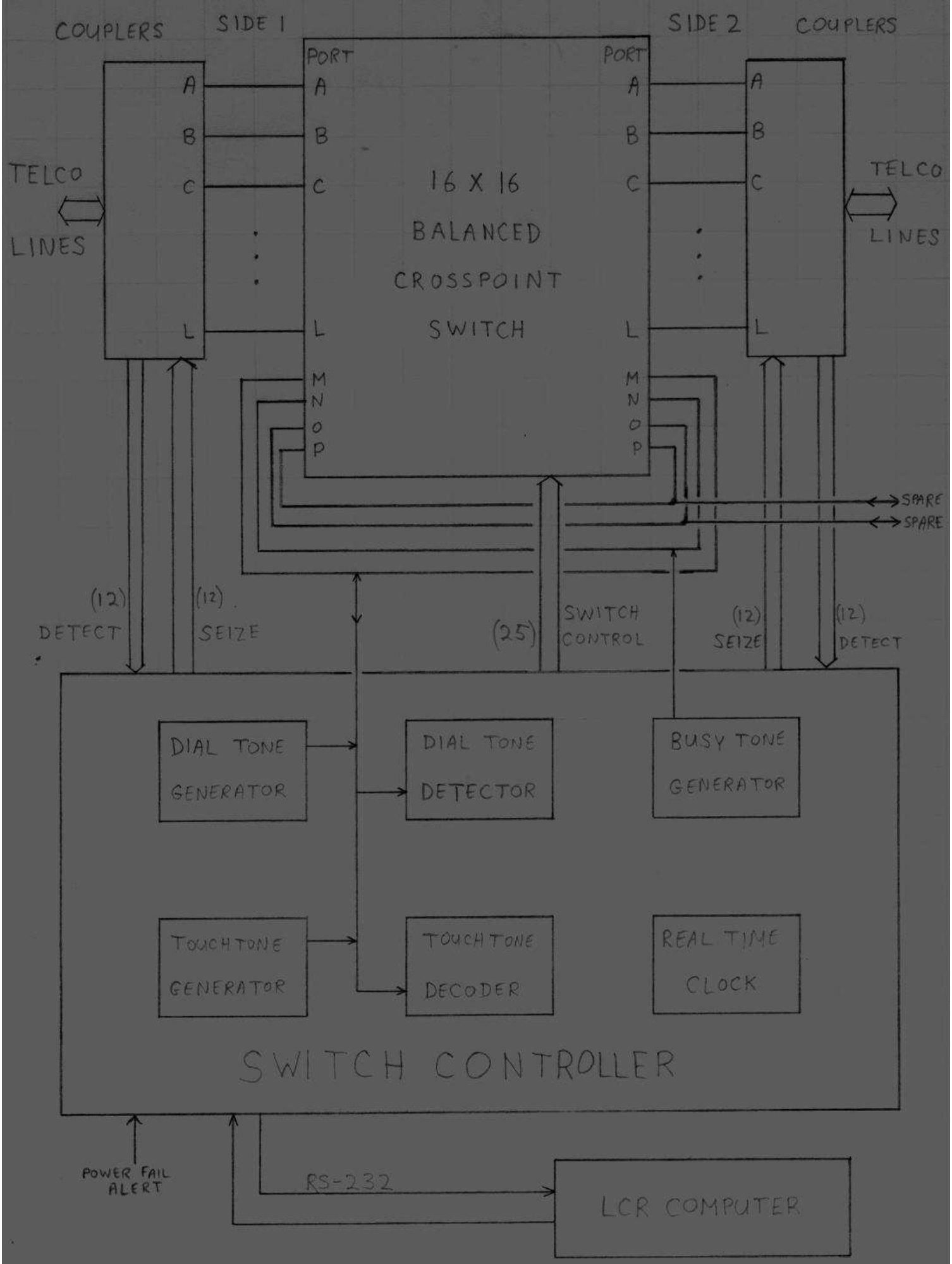

FIGURE 1. SWITCHING CENTER DIAGRAM

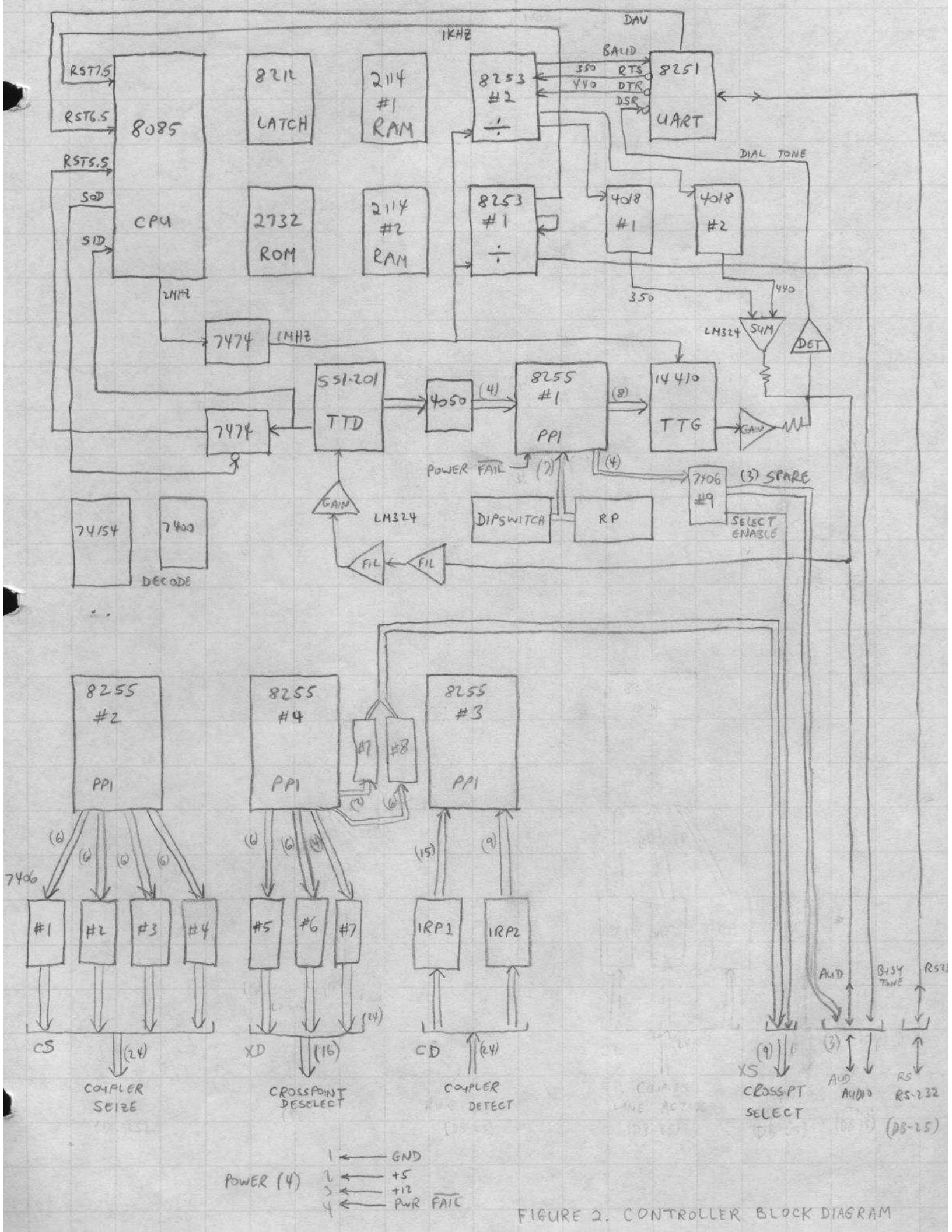

FIGURE 2. CONTROLLER BLOCK DIAGRAM

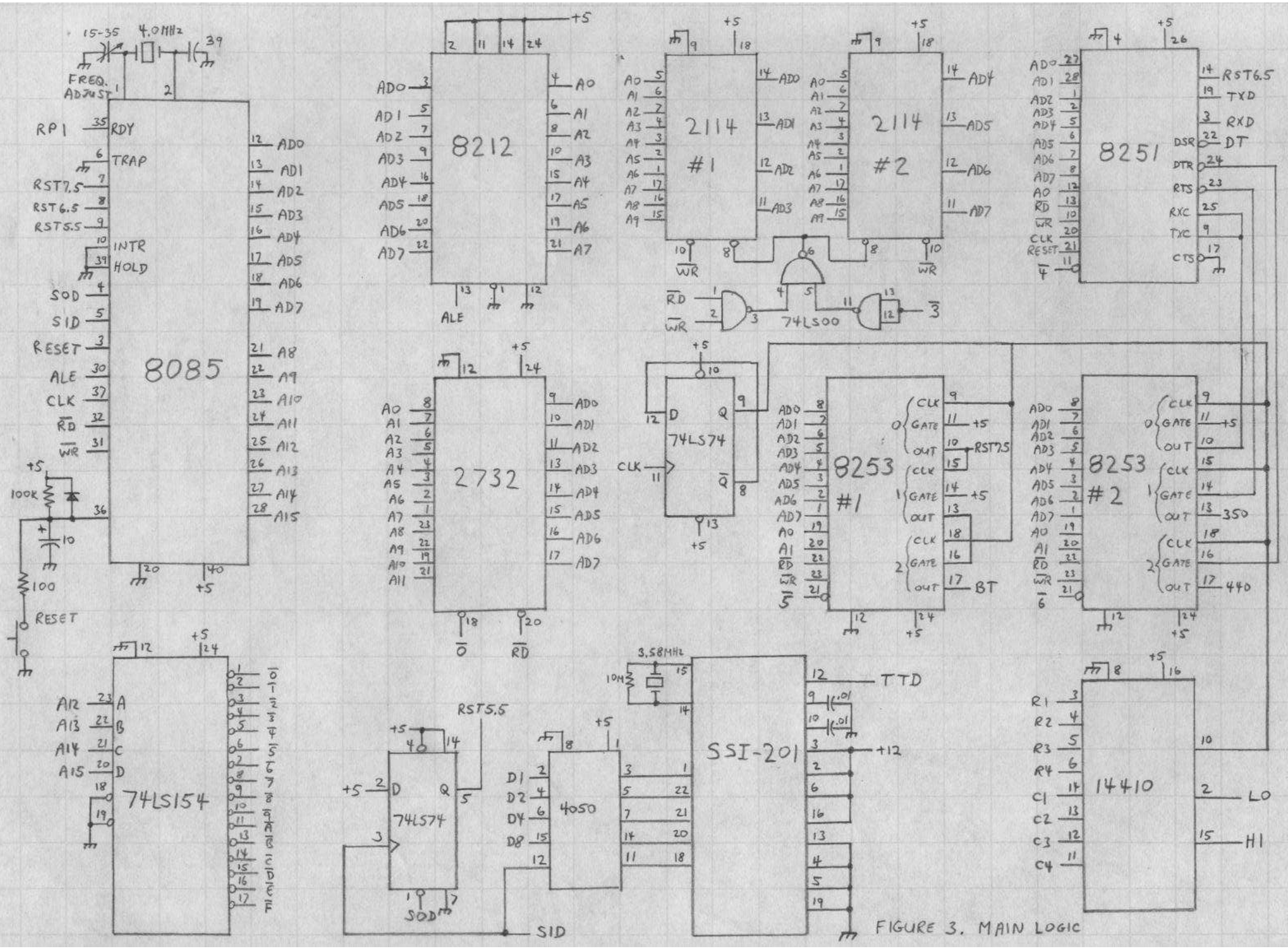

FIGURE 3. MAIN LOGIC

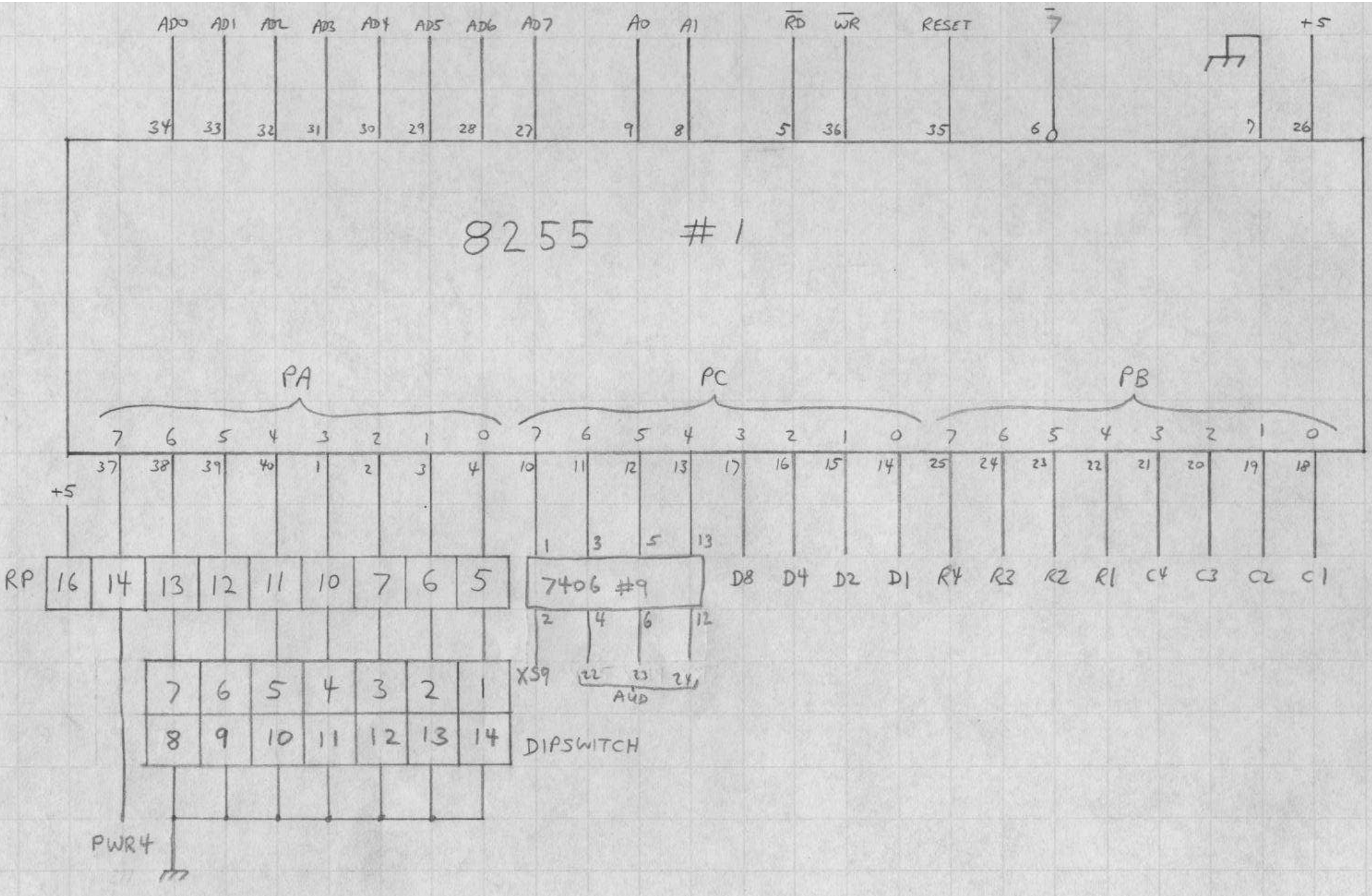

FIGURE 4. INTERNAL I/O

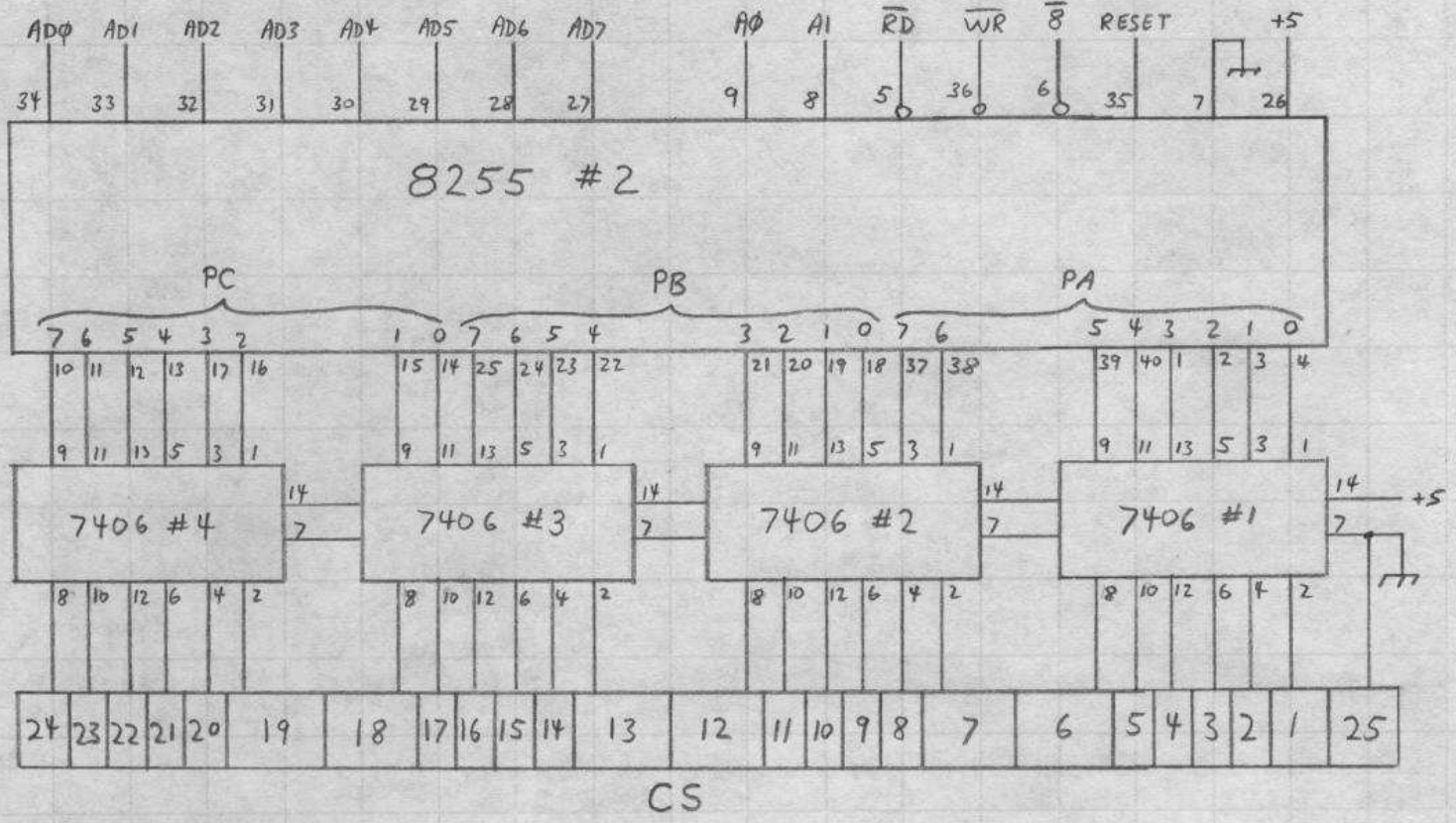

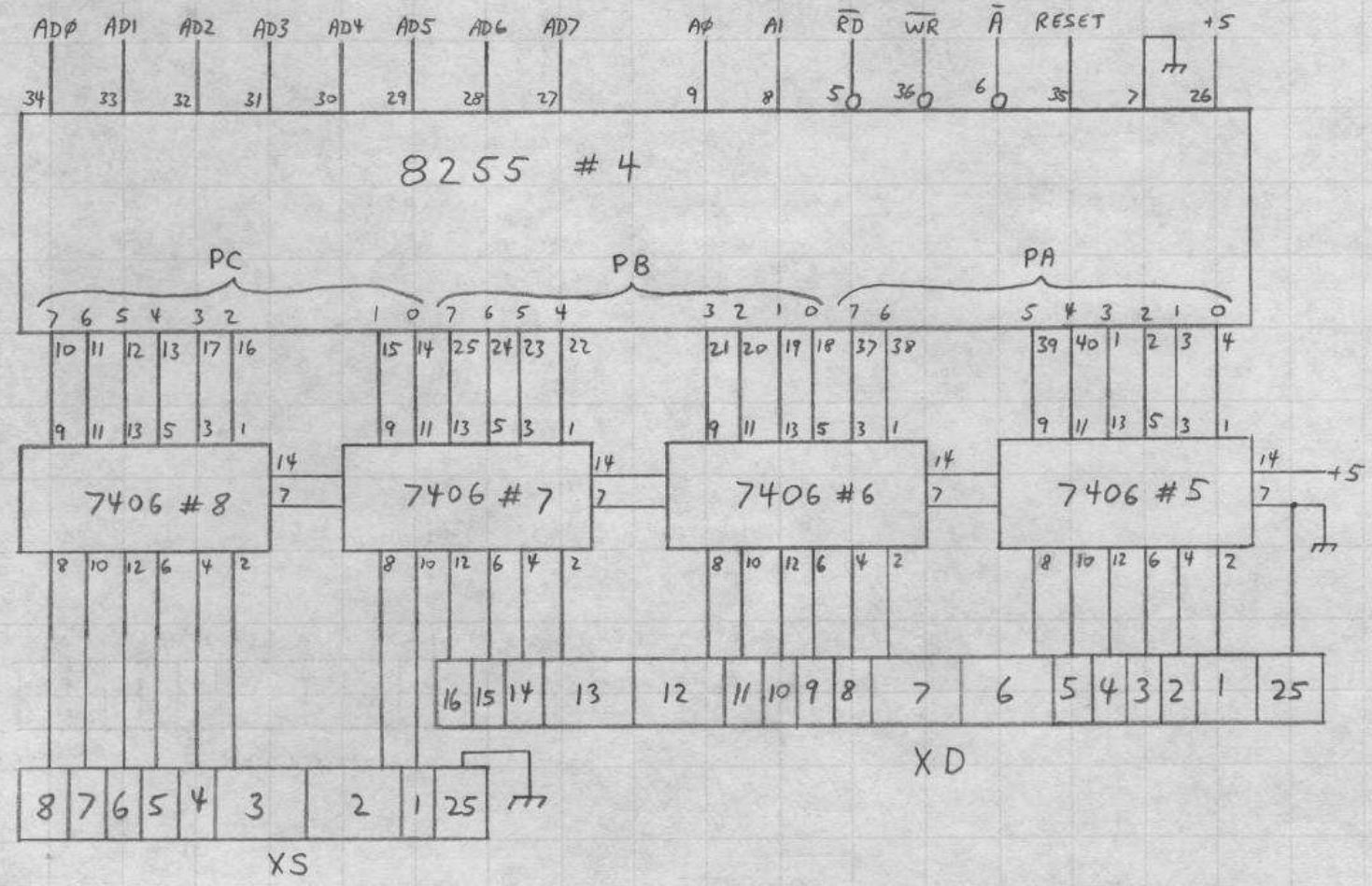

FIGURE 5. EXTERNAL OUTPUTS

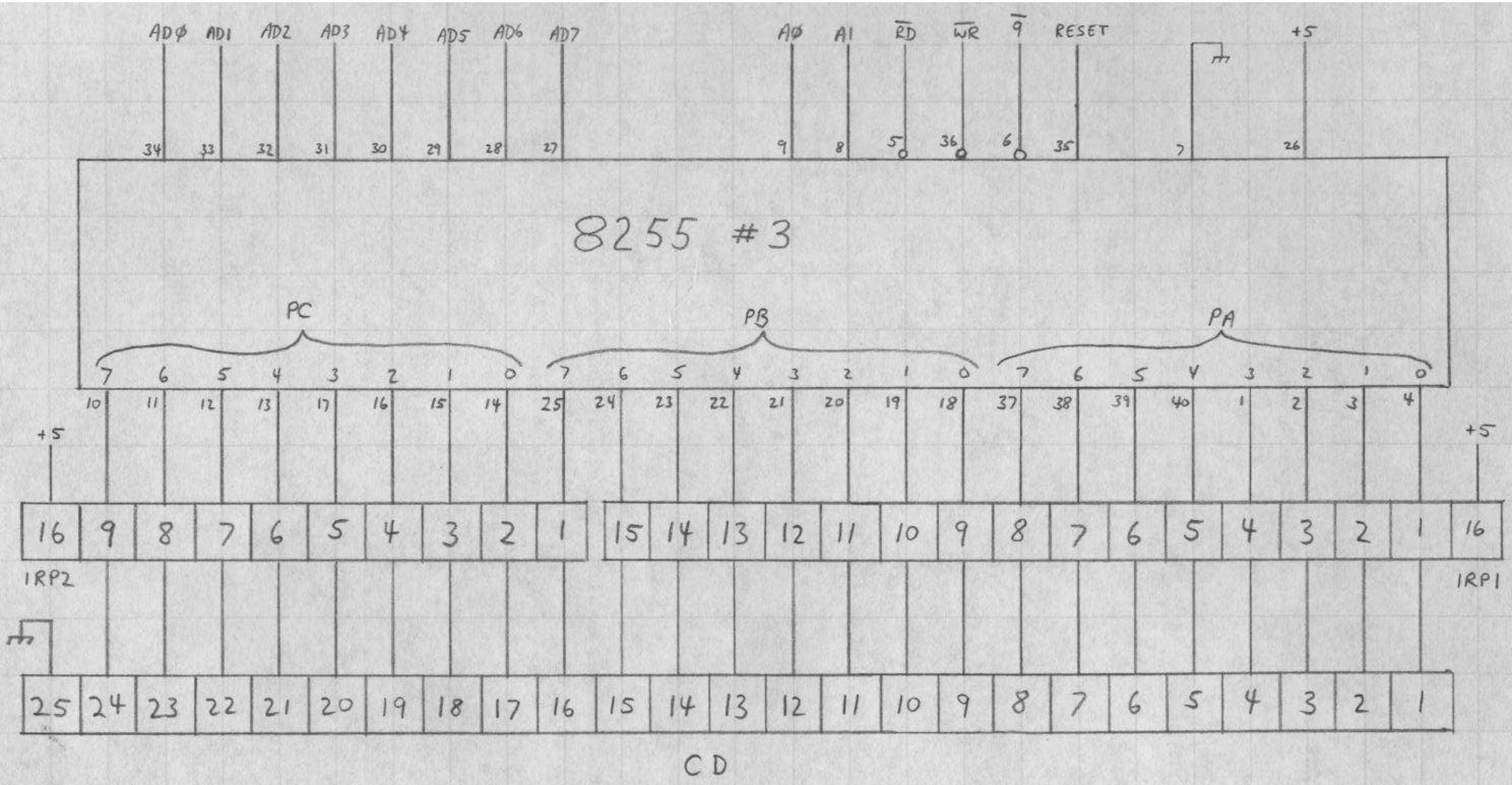

FIGURE 6. EXTERNAL INPUTS

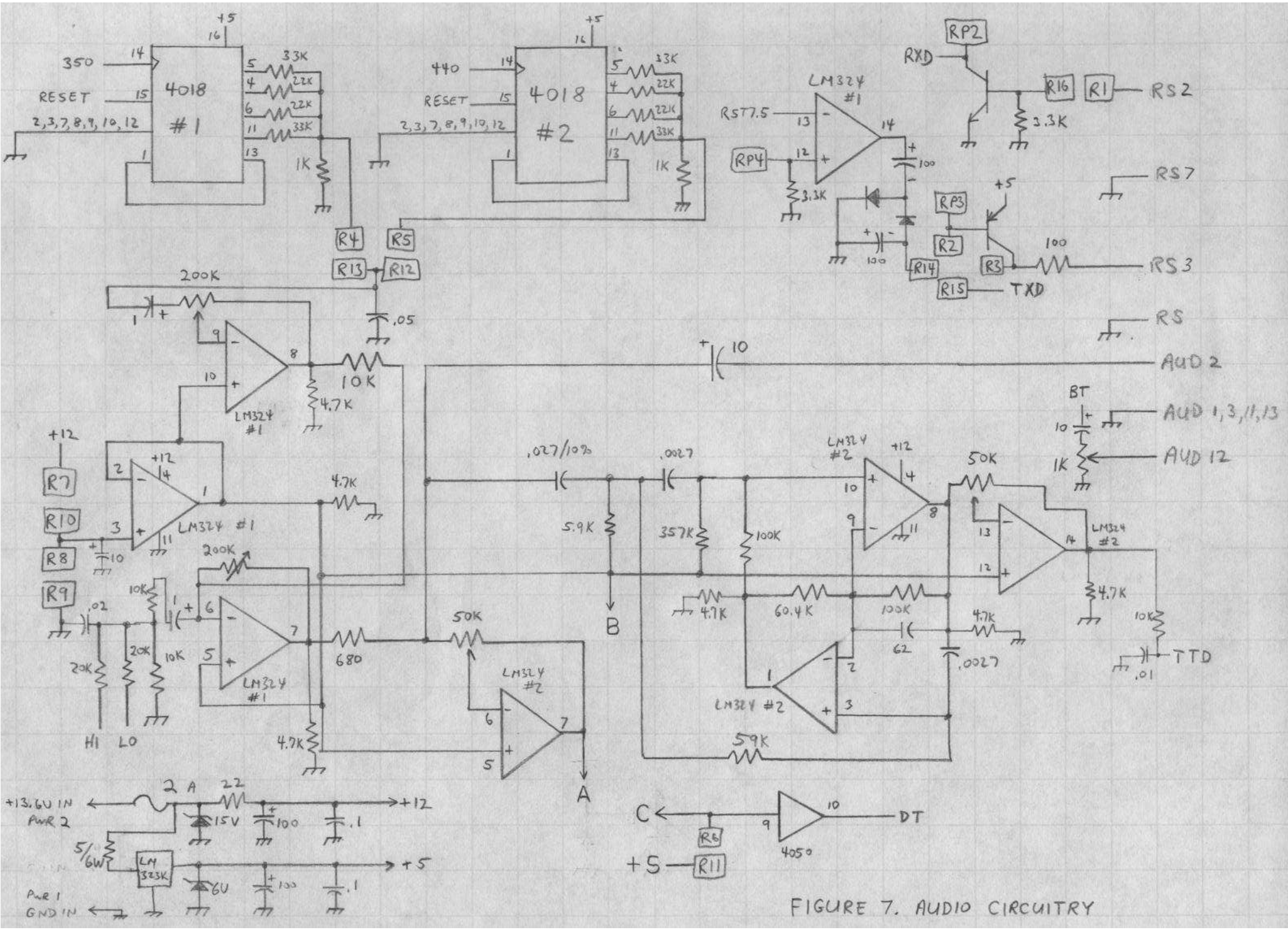

FIGURE 7. AUDIO CIRCUITRY

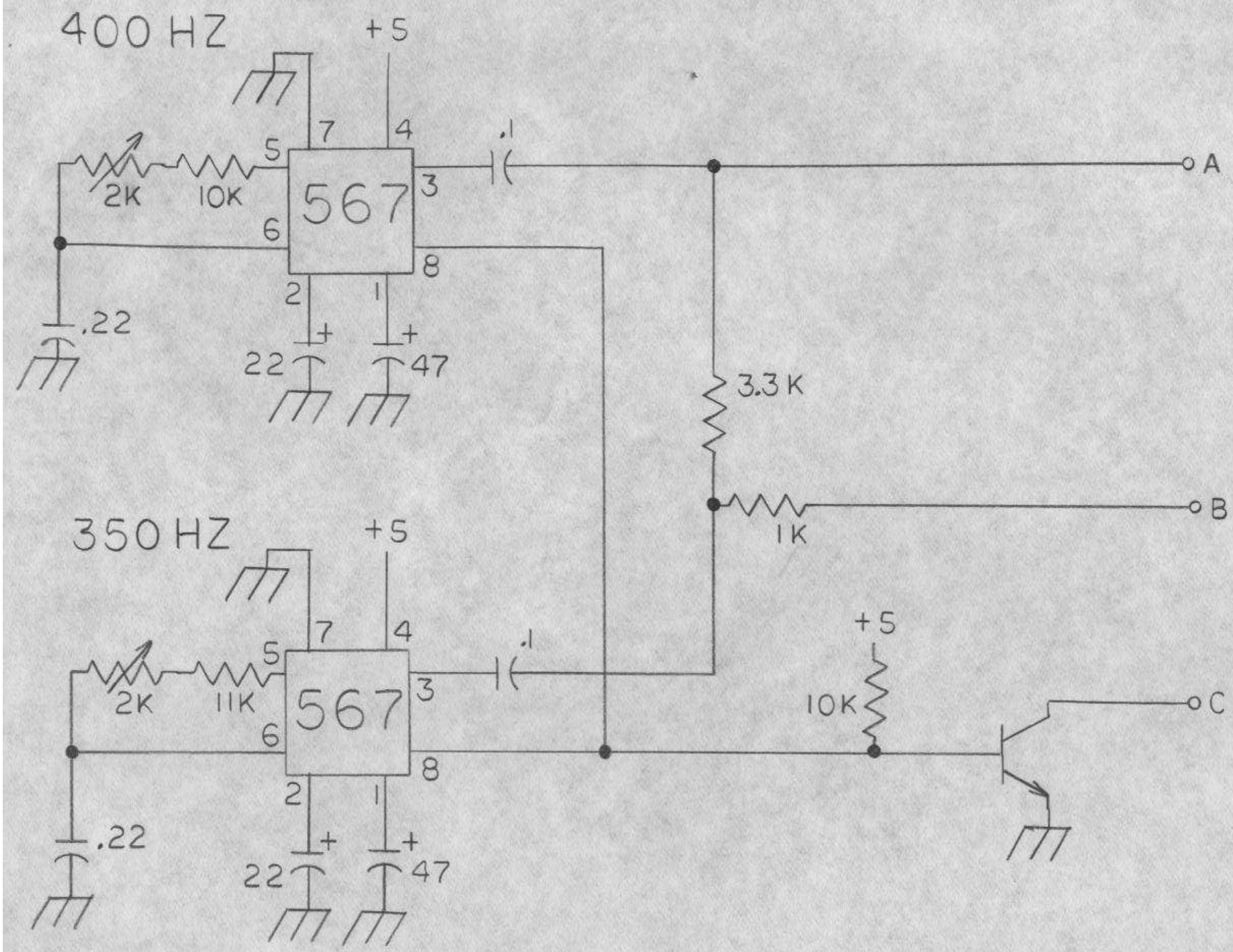

FIG 7A. TONE DETECTORS

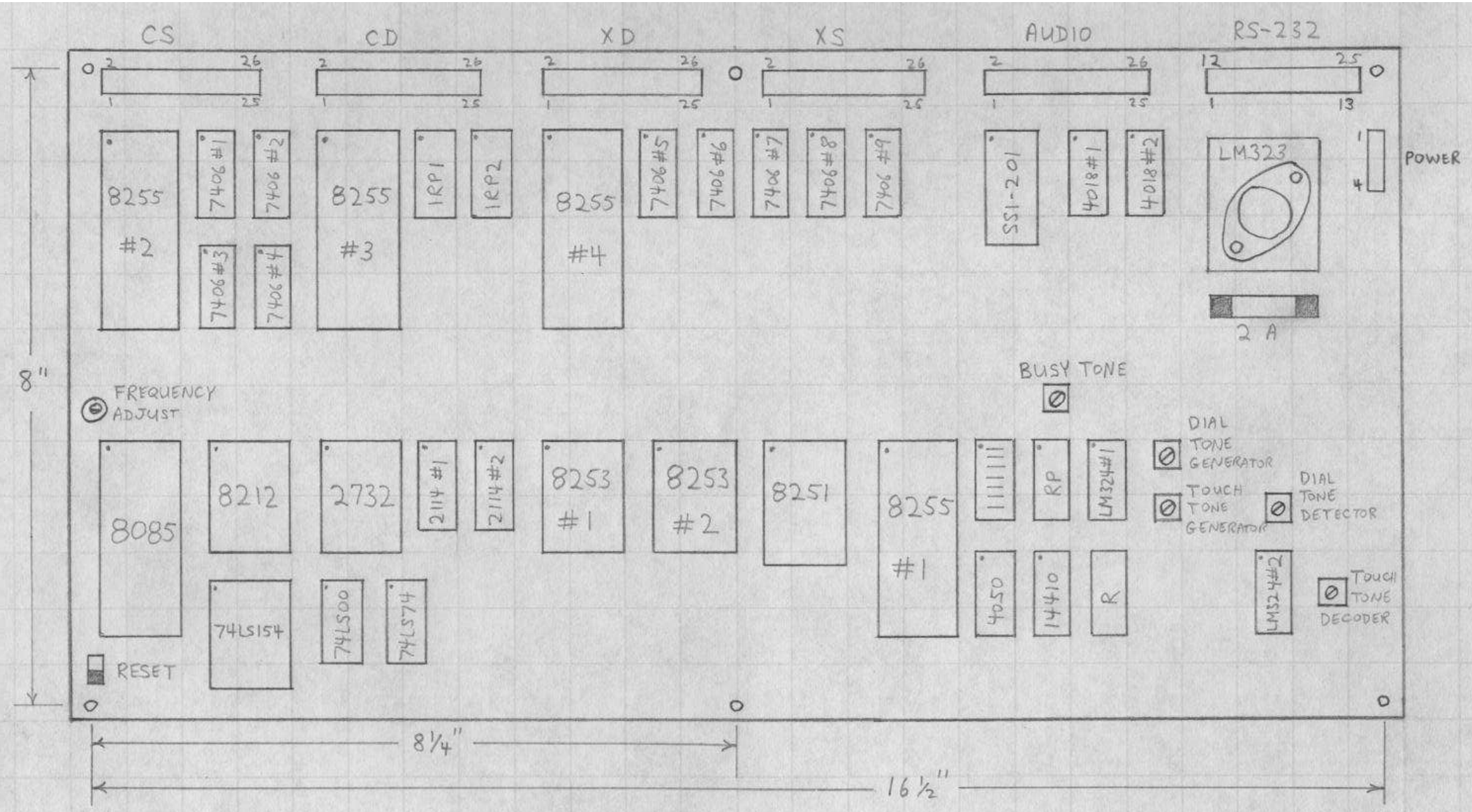

FIGURE 8. SWITCH CONTROLLER LAYOUT, TOP VIEW

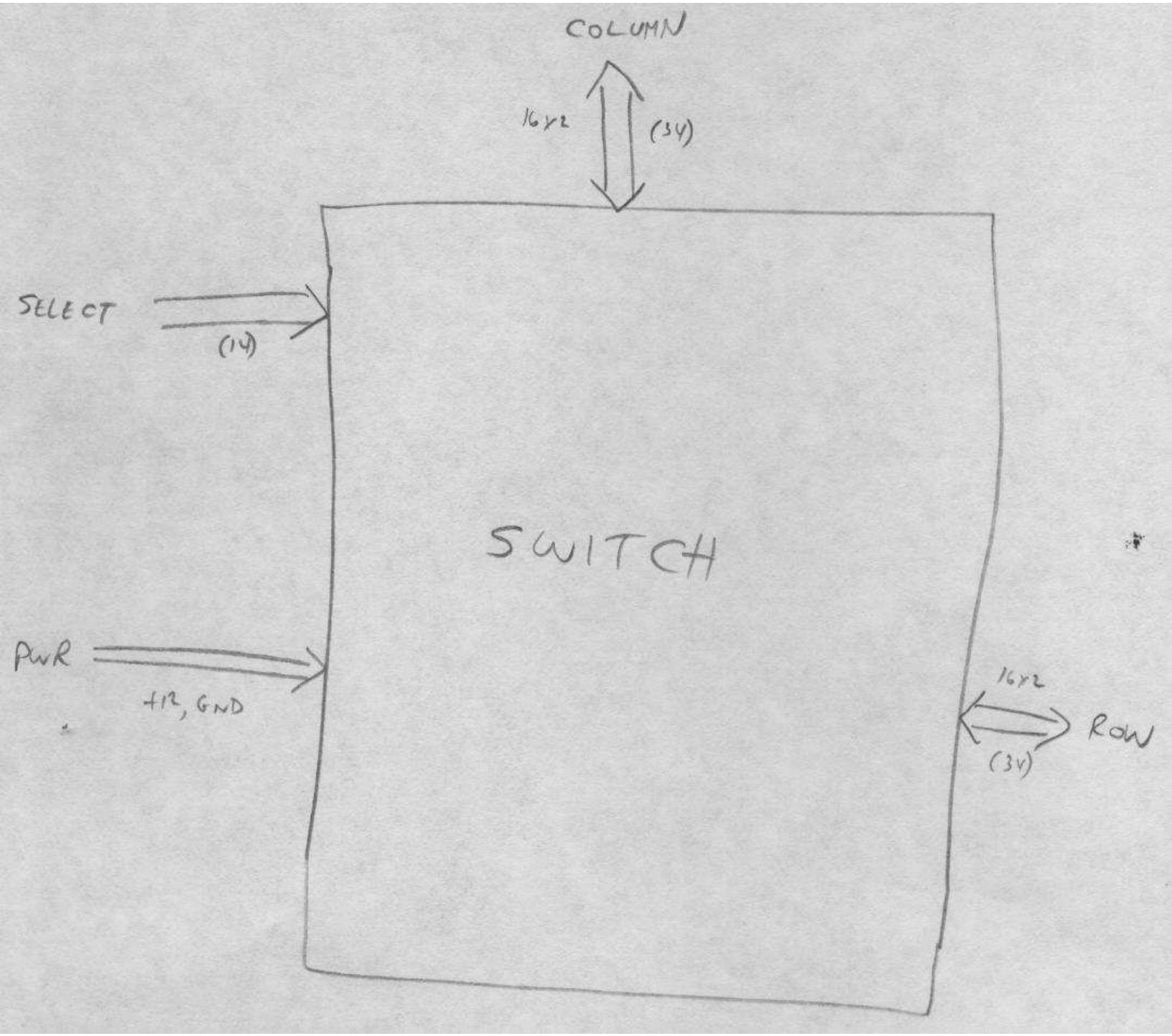
COLUMN
16x2
(34)
SELECT
(14)
SWITCH
PWR
+12, GND
16x2
ROW
(34)

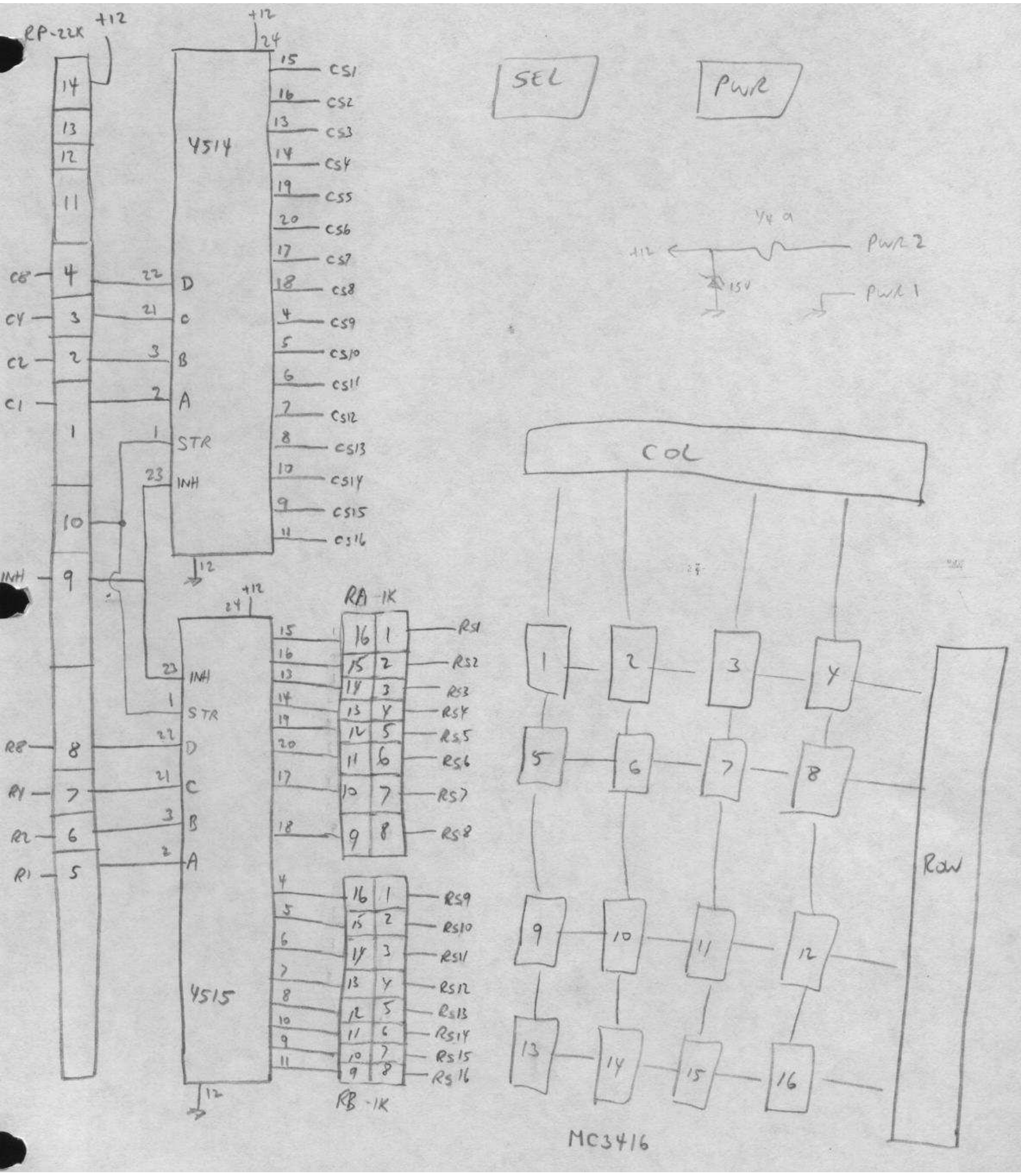
RP-22K
+12
4514
CS1
CS2
CS3
CS4
CS5
CS6
CS7
CS8
CS9
CS10
CS11
CS12
CS13
CS14
CS15
CS16
D
C
B
A
STR
INH
C8
C4
C2
C1
INH
4515
R8
R4
R2
R1
RA-1K
RB-1K
RS1
RS2
RS3
RS4
RS5
RS6
RS7
RS8
RS9
RS10
RS11
RS12
RS13
RS14
RS15
RS16
SEL
PWR
4.9
+12
15V
PWR 2
PWR 1
COL
Row
MC3416

CONNECTORS

ROW:		COL:		CROSSPOINT SELECT: (XS)	PWR:
1 - R1A	17 - R9A	1 - C1A	17 - C9A	1 - C1	1 - GND
2 - R1B	18 - R9B	2 - C1B	18 - C9B	2 - C2	2 - +12
3 - R2A	19 - R10A	3 - C2A	19 - C10A	3 - C4	
4 - R2B	20 - R10B	4 - C2B	20 - C10B	4 - C8	
5 - R3A	21 - R11A	5 - C3A	21 - C11A	5 - R1	
6 - R3B	22 - R11B	6 - C3B	22 - C11B	6 - R2	
7 - R4A	23 - R12A	7 - C4A	23 - C12A	7 - R4	
8 - R4B	24 - R12B	8 - C4B	24 - C12B	8 - R8	
9 - R5A	25 - R13A	9 - C5A	25 - C13A	9 - INH	
10 - R5B	26 - R13B	10 - C5B	26 - C13B	10 - GND	
11 - R6A	27 - R14A	11 - C6A	27 - C14A	11-26 NC	
12 - R6B	28 - R14B	12 - C6B	28 - C14B		
13 - R7A	29 - R15A	13 - C7A	29 - C15A		
14 - R7B	30 - R15B	14 - C7B	30 - C15B		
15 - R8A	31 - R16A	15 - C8A	31 - C16A		
16 - R8B	32 - R16B	16 - C8B	32 - C16B		
	33 -		33 -		
	34 -		34 -		

MC3416 #

	PIN	1	2	3	4	5	6	7	8	9	10	11	12	13	14	15	16
(A1)	1	C1A	C5A	C9A	C13A	C1A	C5A	C9A	C13A	C1A	C5A	C9A	C13A	C1A	C5A	C9A	C13
(Y2)	2	R3B	→			R7B	→			R11B	→			R15B	→		
(RS2)	3	RS4	→			RS8	→			RS12	→			RS16	→		
(Z2)	4	R4B	→			R8B	→			R12B	→			R16B	→		
(CSA)	5	CS1	CS5	CS9	CS13	CS1	CS5	CS9	CS13	CS1	CS5	CS9	CS13	CS1	CS5	CS9	CS13
(CSB)	6	CS2	CS6	CS10	CS14	CS2	CS6	CS10	CS14	CS2	CS6	CS10	CS14	CS2	CS6	CS10	CS14
(CSC)	7	CS3	CS7	CS11	CS15	CS3	CS7	CS11	CS15	CS3	CS7	CS11	CS15	CS3	CS7	CS11	CS15
(CSD)	8	CS4	CS8	CS12	CS16	CS4	CS8	CS12	CS16	CS4	CS8	CS12	CS16	CS4	CS8	CS12	CS16
(Z1)	9	R4A	→			R8A	→			R12A	→			R16A	→		
(RS4)	10	RS3	→			RS7	→			RS11	→			RS15	→		
(Y1)	11	R3A	→			R7A	→			R11A	→			R15A	→		
(D2)	12	C4B	C8B	C12B	C16B	C4B	C8B	C12B	C16B	C4B	C8B	C12B	C16B	C4B	C8B	C12B	C16B
(X1)	13	R2A	→			R6A	→			R10A	→			R14A	→		
(RSW)	14	RS1	→			RS5	→			RS9	→			RS13	→		
(W1)	15	R1A	→			R5A	→			R9A	→			R13A	→		
(D1)	16	C4A	C8A	C12A	C16A	C4A	C8A	C12A	C16A	C4A	C8A	C12A	C16A	C4A	C8A	C12A	C16
(C2)	17	C3B	C7B	C11B	C15B	C3B	C7B	C11B	C15B	C3B	C7B	C11B	C15B	C3B	C7B	C11B	C15B
(C1)	18	C3A	C7A	C11A	C15A	C3A	C7A	C11A	C15A	C3A	C7A	C11A	C15A	C3A	C7A	C11A	C15A
(B2)	19	C2B	C6B	C10B	C14B	C2B	C6B	C10B	C14B	C2B	C6B	C10B	C14B	C2B	C6B	C10B	C14B
(B1)	20	C2A	C6A	C10A	C14A	C2A	C6A	C10A	C14A	C2A	C6A	C10A	C14A	C2A	C6A	C10A	C14A
(A2)	21	C1B	C5B	C9B	C13B	C1B	C5B	C9B	C13B	C1B	C5B	C9B	C13B	C1B	C5B	C9B	C13B
(W2)	22	R1B	→			R5B	→			R9B	→			R13B	→		
(RSX)	23	RS2	→			RS6	→			RS10	→			RS14	→		
(Y2)	24	R2B	→			R6B	→			R10B	→			R14B	→		

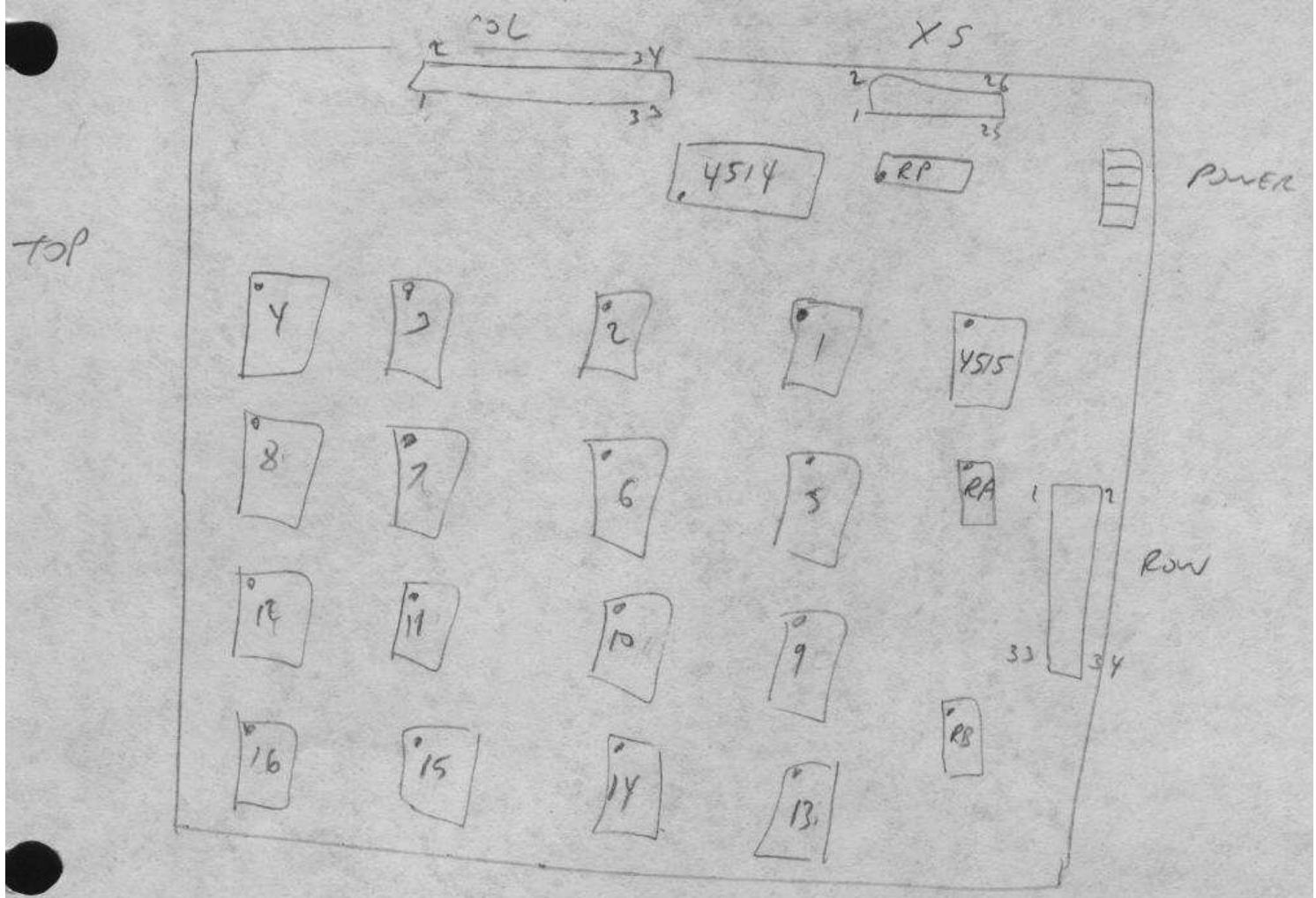
COL
2
34
1
33
X5
2
26
1
25
4514
RP
POWER
TOP
4
3
2
1
4515
8
7
6
5
RA
1
2
ROW
12
11
10
9
33
34
16
15
14
13
RB

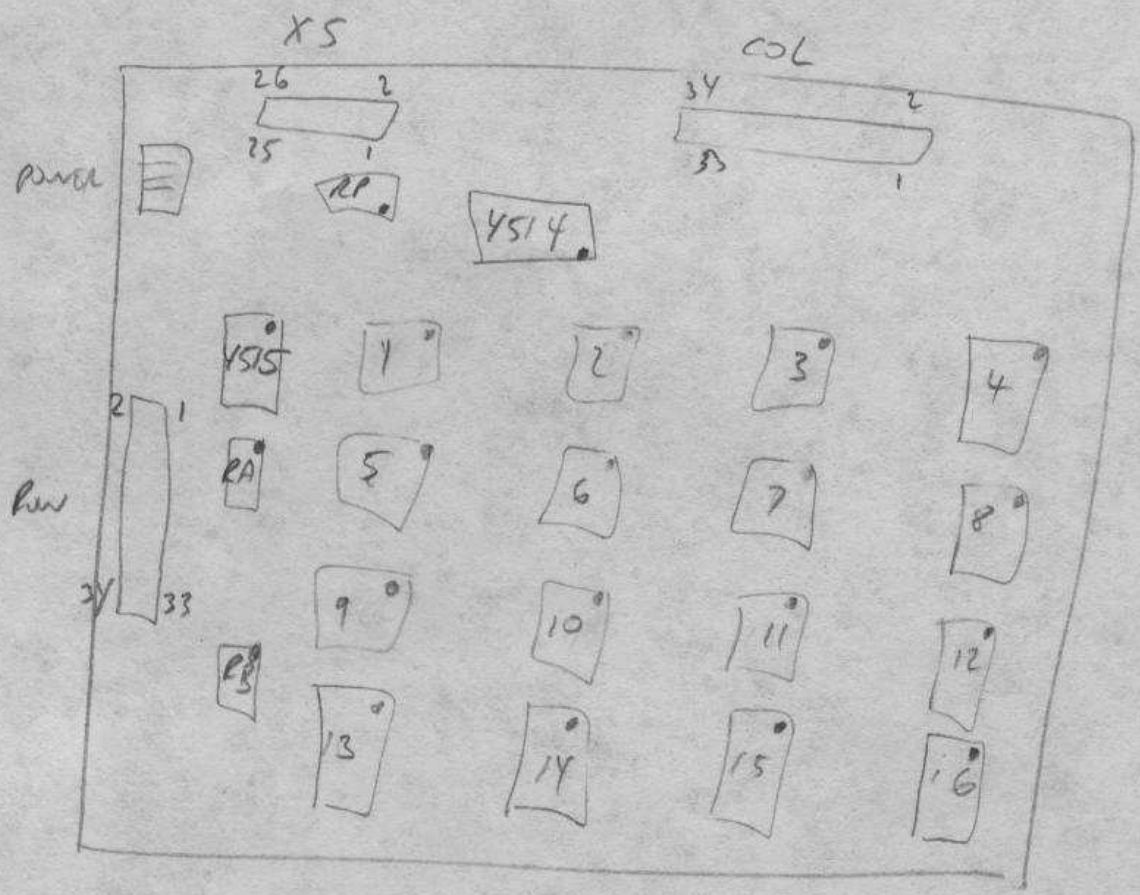
X5
26
2
25
1
COL
34
2
33
1
POWER
RP
4514
4515
1
2
3
4
2
1
ROW
RA
5
6
7
8
34
33
9
10
11
12
RB
13
14
15
16

BOTTOM

INTERCONNECT

COUPLERS

1A 50

1B 50

2A 50

2B 50

SWITCH

COL 34

ROW 34

CONTROLLER

CS 26

CD 26

XD 26

AUD 26

PWR 4

8 XFMRS

16 390Ω /1W RESISTORS

INTERCONNECT

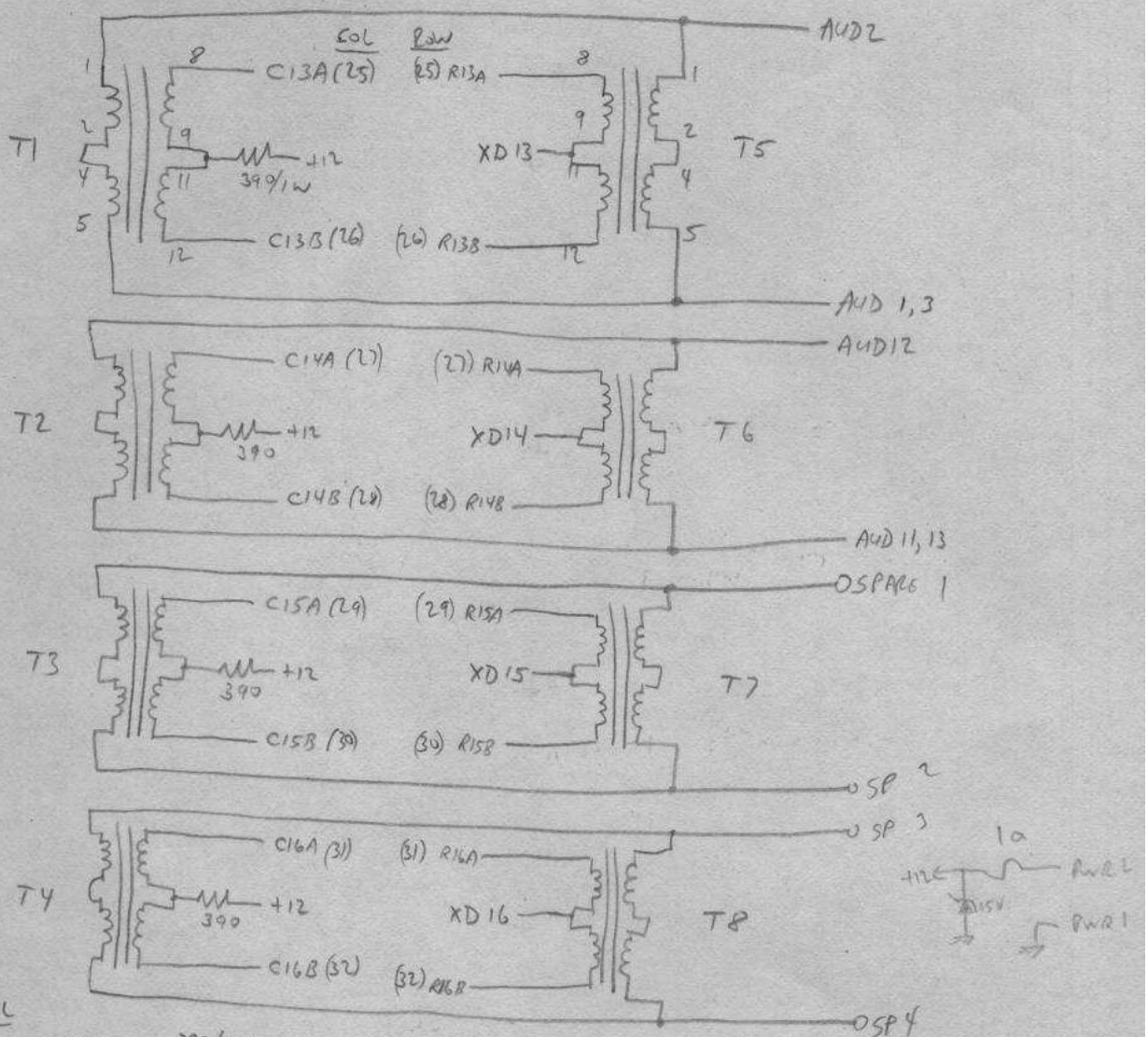

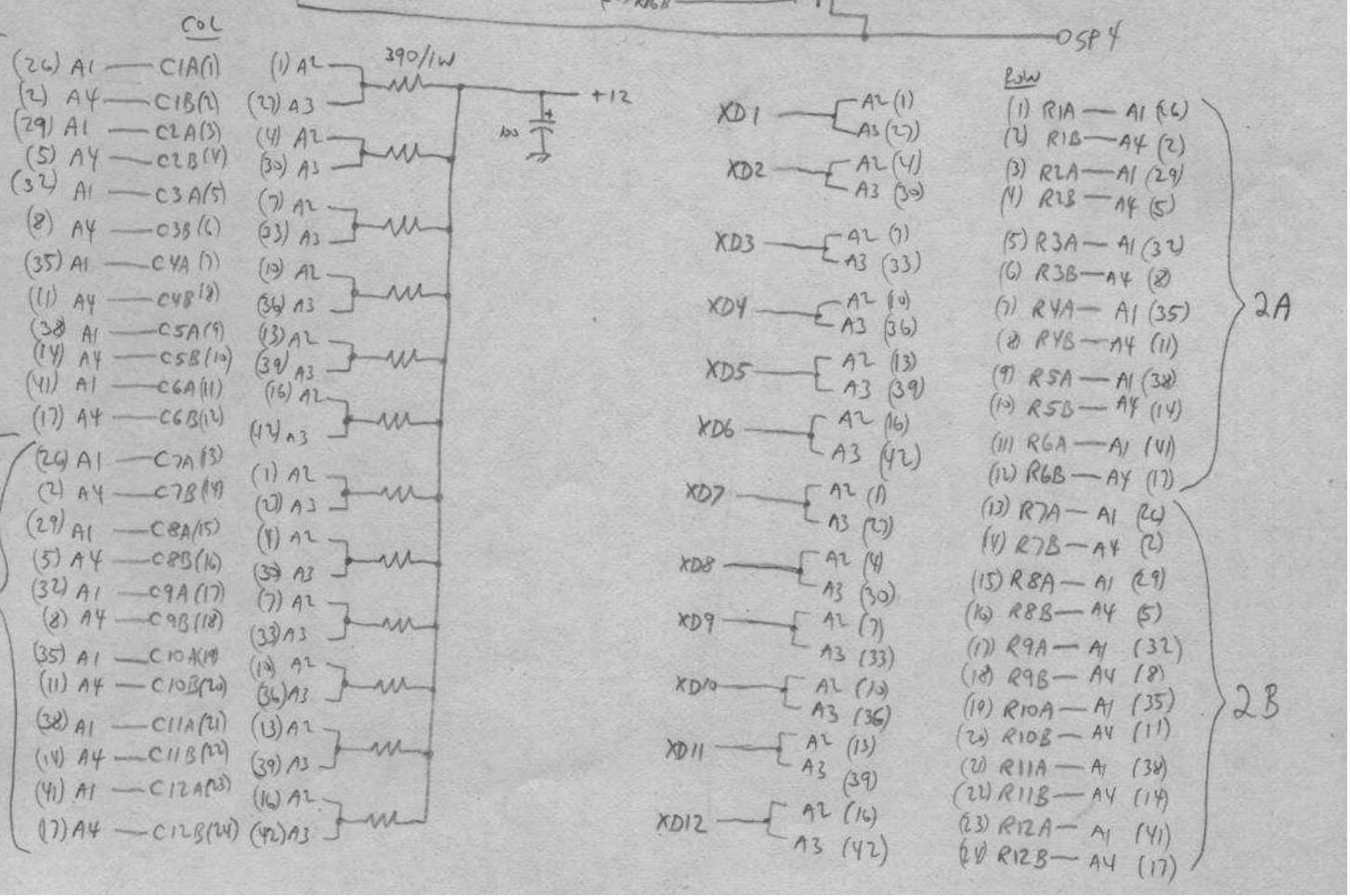

INTERCONNECT

CD1 — 3		CS1 — 28		
CD2 — 6		CS2 — 31		
CD3 — 9		CS3 — 34		
CD4 — 12		CS4 — 37		1A
CD5 — 15		CS5 — 40		
CD6 — 18		CS6 — 43		
CD7 — 3		CS7 — 28		
CD8 — 6		CS8 — 31		
CD9 — 9		CS9 — 34		1B
CD10 — 12		CS10 — 37		
CD11 — 15		CS11 — 40		
CD12 — 18		CS12 — 43		
CD13 — 3		CS13 — 28		
CD14 — 6		CS14 — 31		
CD15 — 9		CS15 — 34		2A
CD16 — 12		CS16 — 37		
CD17 — 15		CS17 — 40		
CD18 — 18		CS18 — 43		
CD19 — 3		CS19 — 28		
CD20 — 6		CS20 — 31		
CD21 — 9		CS21 — 34		2B
CD22 — 12		CS22 — 37		
CD23 — 15		CS23 — 40		
CD24 — 18		CS24 — 43		

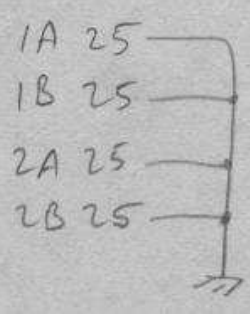

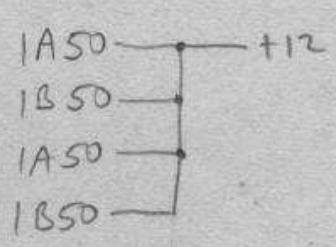

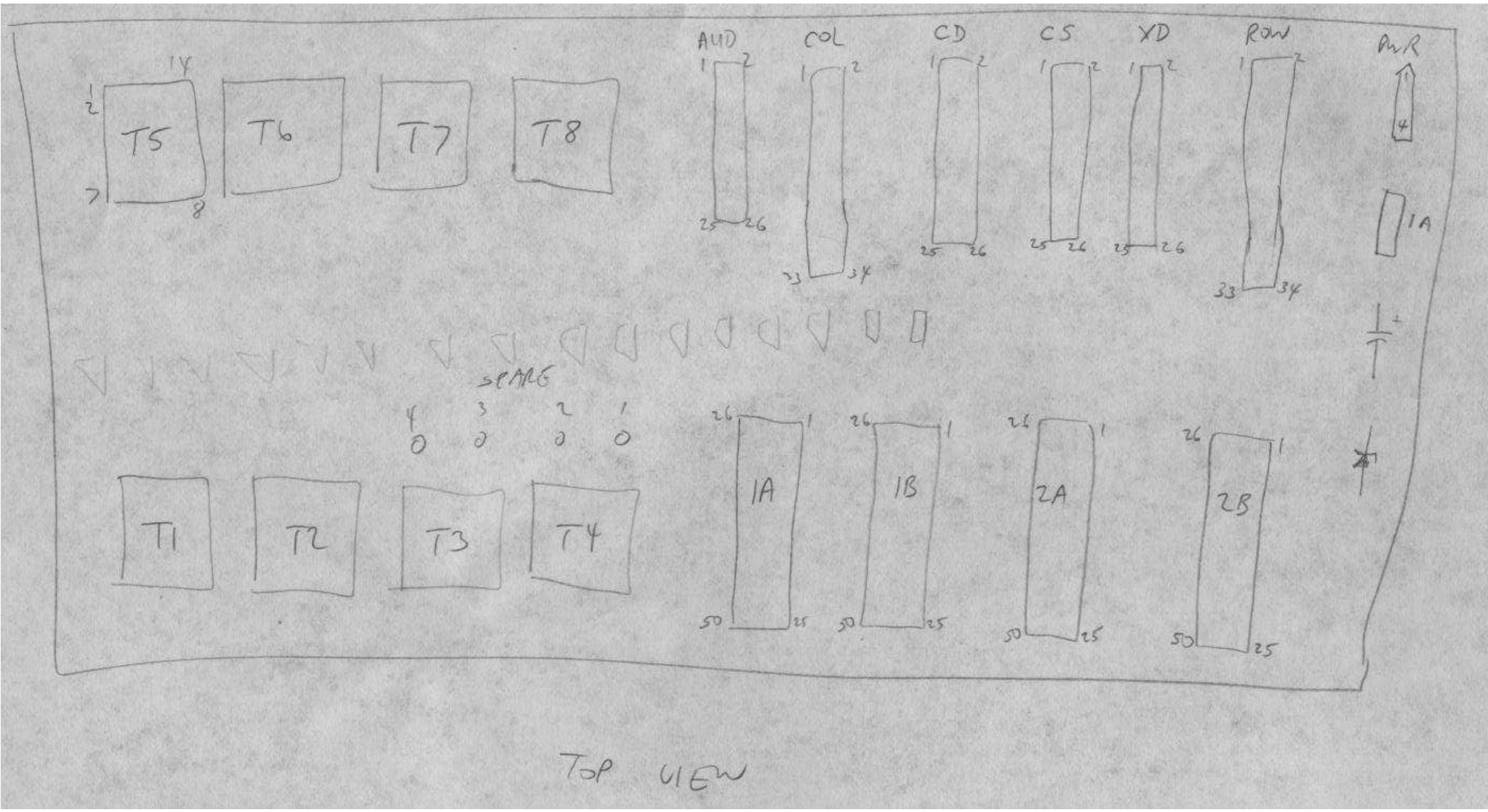
T5
T6
T7
T8
AUD
COL
CD
CS
XD
ROW
PWR
1A
SPARE
4 3 2 1
0 0 0 0
T1
T2
T3
T4
1A
1B
2A
2B

TOP VIEW

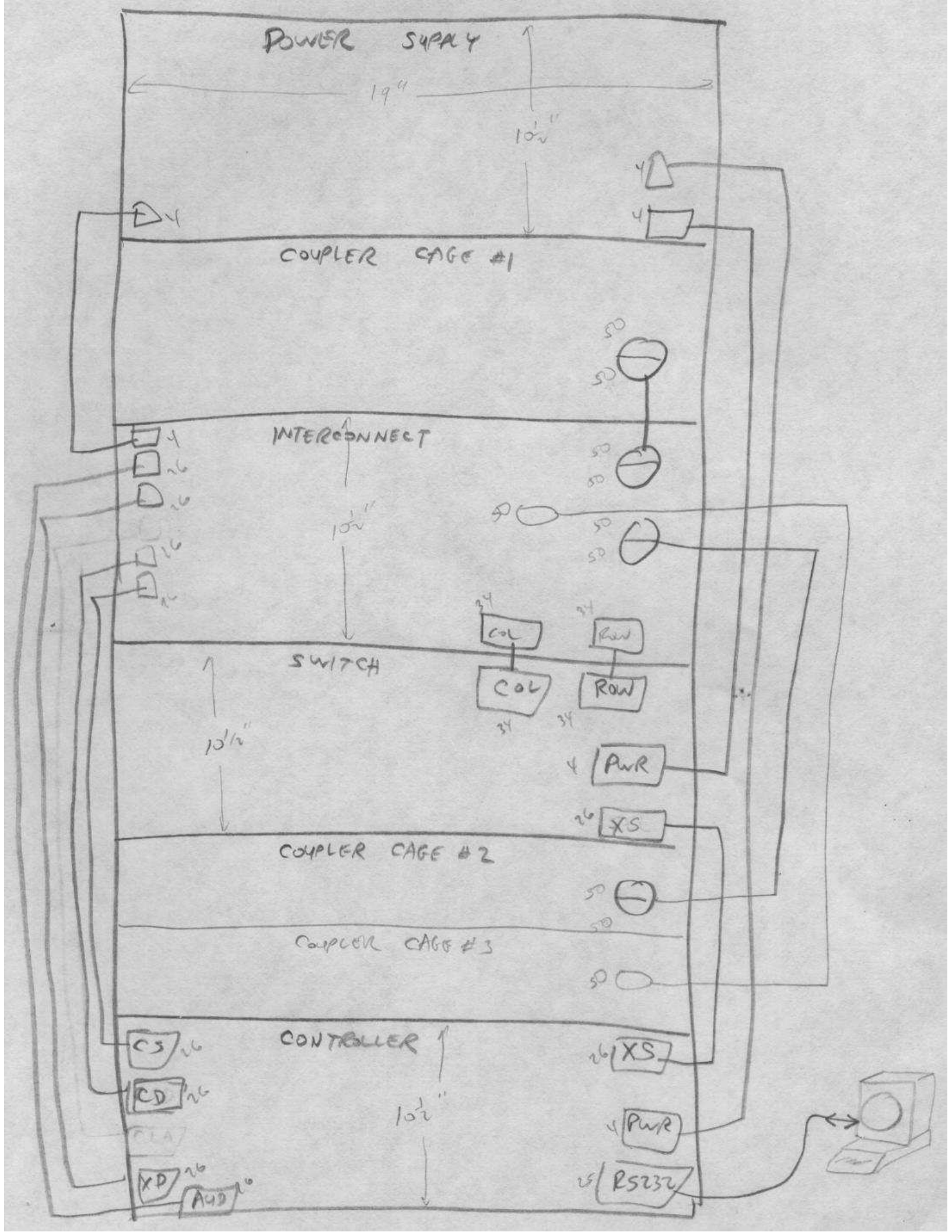
POWER SUPPLY
19"
10½"
COUPLER CAGE #1
INTERCONNECT
10½"
SWITCH
COL
ROW
COL
ROW
10½"
PWR
XS
COUPLER CAGE #2
COUPLER CAGE #3
CONTROLLER
CS
CD
XD
AUD
XS
PWR
RS232
10½"

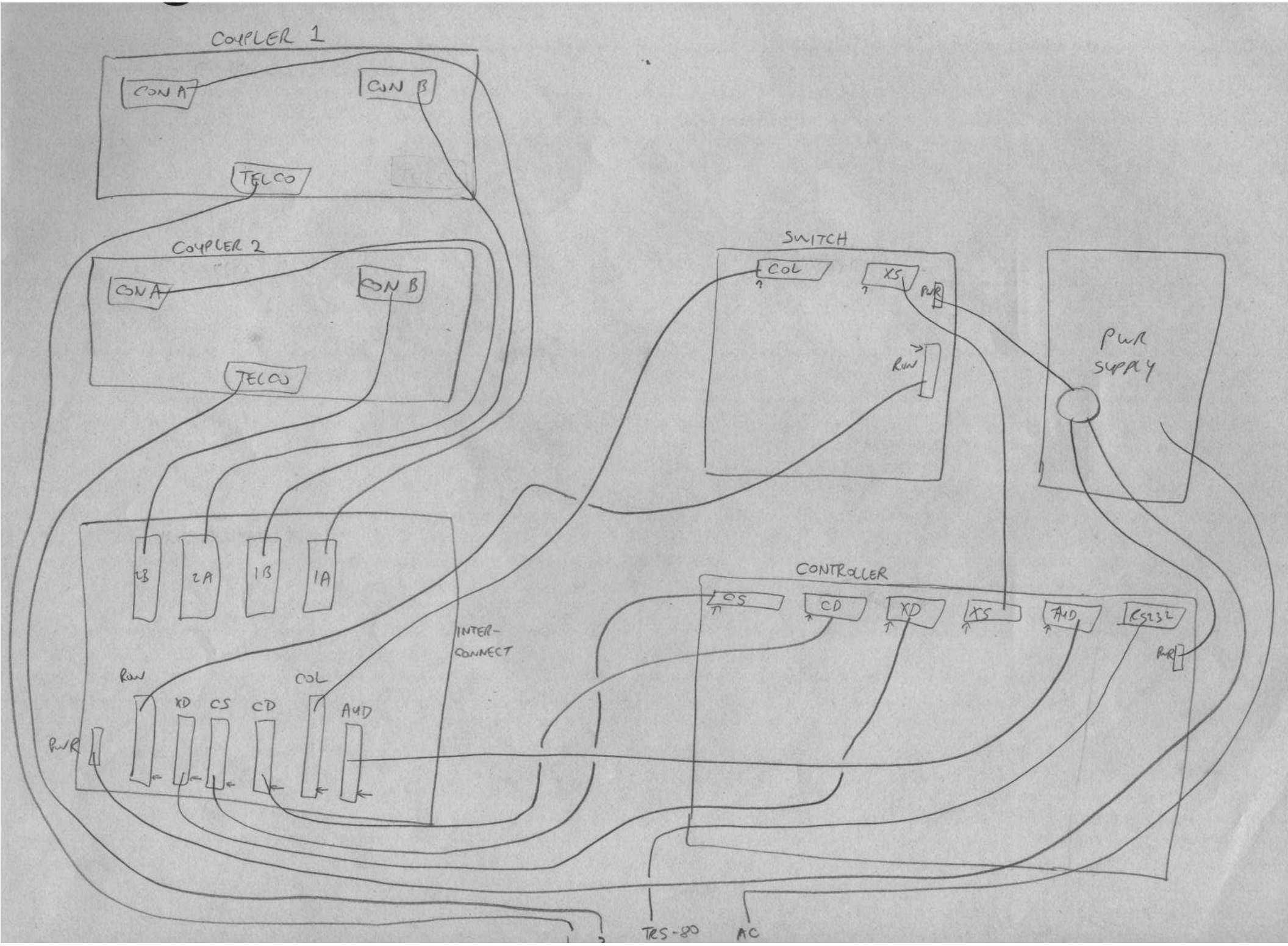
COUPLER 1
CON A
CON B
TELCO
COUPLER 2
CON A
CON B
TELCO
SWITCH
COL
XS
PWR
ROW
PWR SUPPLY
2B
2A
1B
1A
INTER-CONNECT
ROW
COL
XD
CS
CD
AUD
PWR
CONTROLLER
CS
CD
XD
XS
AUD
RS232
PWR
TRS-80
AC

```
0000                    ; LEAST COST ROUTING
0000                    ; SWITCH CONTROLLER
0000                    ;
0000                    ;
0000                    ; ******************
0000                    ; *                *
0000                    ; *  ROBERT GLASER *
0000                    ; *                *
0000                    ; * IC ENGINEERING *
0000                    ; *                *
0000                    ; *   APRIL 1981   *
0000                    ; *                *
0000                    ; ******************
0000                    ;
0000                    ;
0000                    ;
0000                    ; SC2.7
0000                    ;
0000                    ; LAST MODIFIED: 3/25/82
0000                    ;
0000                    ;*******************************
0000                    ;
0000                    ; CONTROLLER FUNCTIONS:
0000                    ;
0000                    ; --INTERFACES WITH MATRIX SWITCH
0000                    ; --INTERFACES WITH TT DECODER
0000                    ; --INTERFACES WITH TT GENERATOR
0000                    ; --PROVIDES A REAL-TIME CLOCK
0000                    ; --SCANS TELEPHONE LINES AND
0000                    ;   SERVICES INCOMING CALLS
0000                    ;   AND DISCONNECTS
0000                    ; --COMMUNICATES WITH EXTERNAL
0000                    ;   COMPUTER VIA SERIAL RS-232 LINE
0000                    ; --PERFORMS LOW-LEVEL FUNCTIONS
0000                    ;   SO THAT LCR COMPUTER CAN OPERATE
0000                    ;   AT A MUCH HIGHER LEVEL
0000                    ;   (MAKING LCR DECISIONS AND
0000                    ;    LOGGING CALLS)
0000                    ;
0000                    ;*******************************
0000                    ;
0000                    ; HARDWARE:
0000                    ;
0000                    ;  8085 CPU
0000                    ;  2732 ROM (4K X 8) [0000-0FFF]
0000                    ;  (2) 2114 RAM (1K X 8) [3000-33FF]
0000                    ;  8251 UART
0000                    ;  (2) 8253 COUNTER/TIMERS
0000                    ;  (4) 8255 PPI (192 I/O LINES)
0000                    ;  TOUCHTONE DECODER (SSI-201)
0000                    ;  TOUCHTONE GENERATOR (MC14410)
0000                    ;  DIAL TONE DETECTOR
0000                    ;
0000                    ;*******************************
0000                    ;
0000                    ; INTERRUPT STRUCTURE
0000                    ;
0000                    ;  RST 7.5: 1000 HZ CLOCK
0000                    ;  RST 6.5: UART DATA AVAILABLE
0000                    ;  RST 5.5: TOUCHTONE AVAILABLE
0000                    ;
0000                    ;*******************************
0000                    ;
0000                    ; INPUT/OUTPUT:
0000                    ;
0000                    ;  SOD: RESET LATCHED RST 5.5
0000                    ;  SID: UNLATCHED VALID TONE
0000                    ;
0000                    ;  RTS: 350 HZ TONE ENABLE OUTPUT
0000                    ;  DTR: 440 HZ TONE ENABLE OUTPUT
0000                    ;  DSR: DIAL TONE DETECT INPUT
0000                    ;
0000                    ;  PPI1A:
0000                    ;    BITS 0-6 DIPSWITCH INPUT
0000                    ;         BIT 0 -- INITIAL ANSWER MODE
0000                    ;         BITS 1-3 -- UART SPEED
```

```
0078 0000                    ;          110,150,300,600,1200,
0079 0000                    ;          2400,4800,9600 BAUD
0080 0000                    ;         BIT 4 -- 0 = PERMIT JUMPS
0081 0000                    ;         BITS 5-6 -- UNALLOCATED
0082 0000                    ;    BIT 7 -- 0 = POWER FAIL
0083 0000                    ;
0084 0000                    ;  PPI1B: OUTPUT TO TT GENERATOR
0085 0000                    ;    BITS 7-0 = R4 R3 R2 R1 C4 C3 C2 C1
0086 0000                    ;
0087 0000                    ;  PPI1C:
0088 0000                    ;    BITS 0-3 -- INPUT FROM TTD
0089 0000                    ;    BITS 4-6 -- SPARE O/C OUTPUTS
0090 0000                    ;                TO XS13-15
0091 0000                    ;    BIT 7 -- CROSSPOINT INHIBIT
0092 0000                    ;             O/C OUTPUT XS9
0093 0000                    ;
0094 0000                    ;  PPI2: O/C OUTPUT TO COUPLER SEIZE
0095 0000                    ;        (SIDE1 = 1-12, SIDE2 = 13-24)
0096 0000                    ;     A: CS1-8
0097 0000                    ;     B: CS9-16
0098 0000                    ;     C: CS17-24
0099 0000                    ;
0100 0000                    ;  PPI3: INPUT FROM COUPLER DETECT
0101 0000                    ;     A: CD1-8
0102 0000                    ;     B: CD9-16
0103 0000                    ;     C: CD17-24
0104 0000                    ;
0105 0000                    ;  PPI4A,B: O/C OUTPUT TO
0106 0000                    ;           CROSSPOINT DESELECT
0107 0000                    ;           (ROWS, SIDE2)
0108 0000                    ;        A: XD1-8
0109 0000                    ;        B: XD9-16
0110 0000                    ;
0111 0000                    ;  PPI4C: O/C OUTPUT TO
0112 0000                    ;         CROSSPOINT SELECT
0113 0000                    ;         XS7-4  SIDE2 (ROW)
0114 0000                    ;         XS3-0  SIDE1 (COLUMN)
0115 0000                    ;
0116 0000                    ;*******************************
0117 0000                    ;
0118 0000                    ; DEFINITIONS
0119 0000                    ;
0120 0000                    ; I/O
0121 0000                    ;
0122 0000                    URDAT:   EQU     4000H    ;UART DATA
0123 0000                    UR:      EQU     4001H    ;UART C/S
0124 0000                    ;TIME1:  EQU     5003H    ;8253 #1 C/S
0125 0000                    TIM11:   EQU     5000H    ;1000 HZ
0126 0000                    ;TIM12:  EQU     5001H    ;BUSY TONE KEY
0127 0000                    ;TIM13:  EQU     5002H    ;BUSY TONE
0128 0000                    ;TIME2:  EQU     6003H    ;8253 #2 C/S
0129 0000                    TIM21:   EQU     6000H    ;BAUD RATE
0130 0000                    ;TIM22:  EQU     6001H    ;350 HZ
0131 0000                    ;TIM23:  EQU     6002H    ;440 HZ
0132 0000                    ;PPI1:   EQU     7003H    ;8255 #1
0133 0000                    PPI1A:   EQU     7000H
0134 0000                    ;PPI1B:  EQU     7001H
0135 0000                    ;PPI1C:  EQU     7002H
0136 0000                    ;PPI2:   EQU     8003H    ;8255 #2
0137 0000                    PPI2A:   EQU     8000H
0138 0000                    ;PPI2B:  EQU     8001H
0139 0000                    ;PPI2C:  EQU     8002H
0140 0000                    ;PPI3:   EQU     9003H    ;8255 #3
0141 0000                    PPI3A:   EQU     9000H
0142 0000                    ;PPI3B:  EQU     9001H
0143 0000                    ;PPI3C:  EQU     9002H
0144 0000                    ;PPI4:   EQU     0A003H   ;8255 #4
0145 0000                    PPI4A:   EQU     0A000H
0146 0000                    ;PPI4B:  EQU     0A001H
0147 0000                    ;PPI4C:  EQU     0A002H
0148 0000                    ;
0149 0000                    ; ASSEMBLER DEFICIENCIES
0150 0000                    ;
0151 0000                    SP:      EQU     6
0152 0000                    PSW:     EQU     6
0153 0000                    RIM:     EQU     20H
0154 0000                    SIM:     EQU     30H
0155 0000                    ;
```